Cross Sections
Thermal Suite
Bifold Door 2P

Date	04/08/2022	**Drawn**	MS
Scale	1:2	**Checked**	RT

001

©UNO Windows & Doors. All rights reserved.
Technical details subject to change without notice.

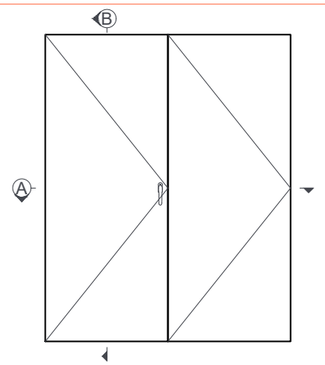

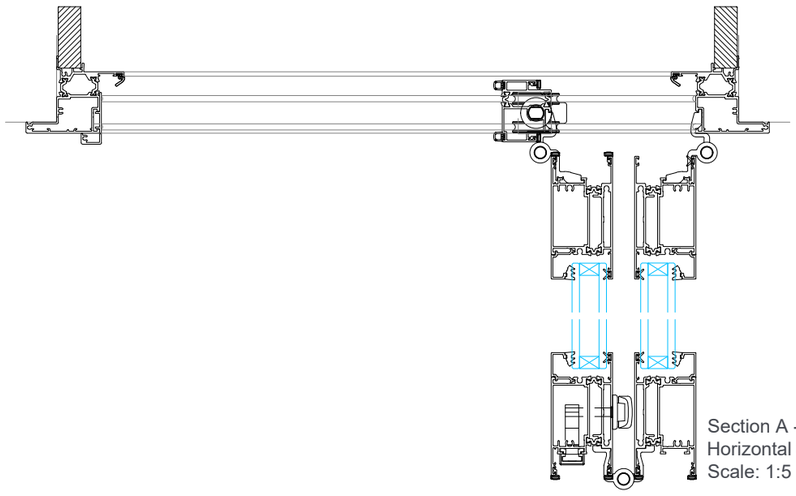

Section A - Open
Horizontal Section
Scale: 1:5

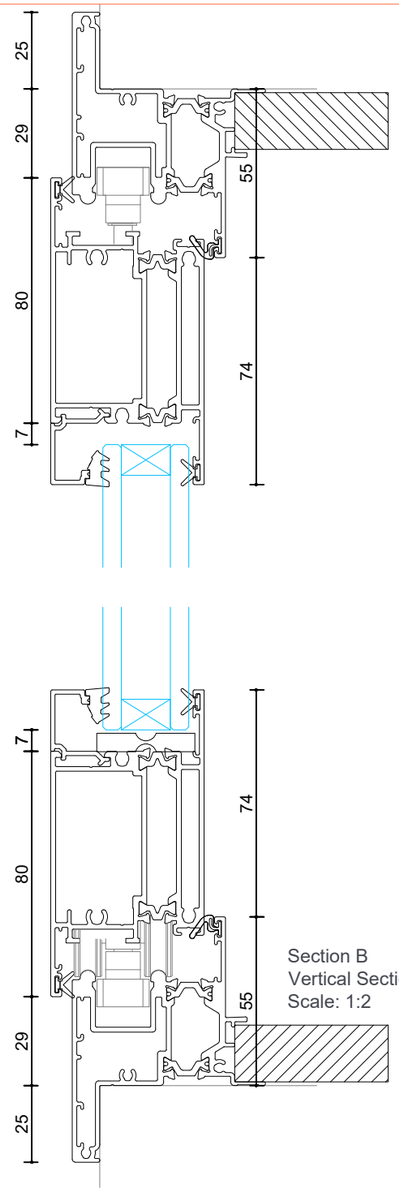

Section B
Vertical Section
Scale: 1:2

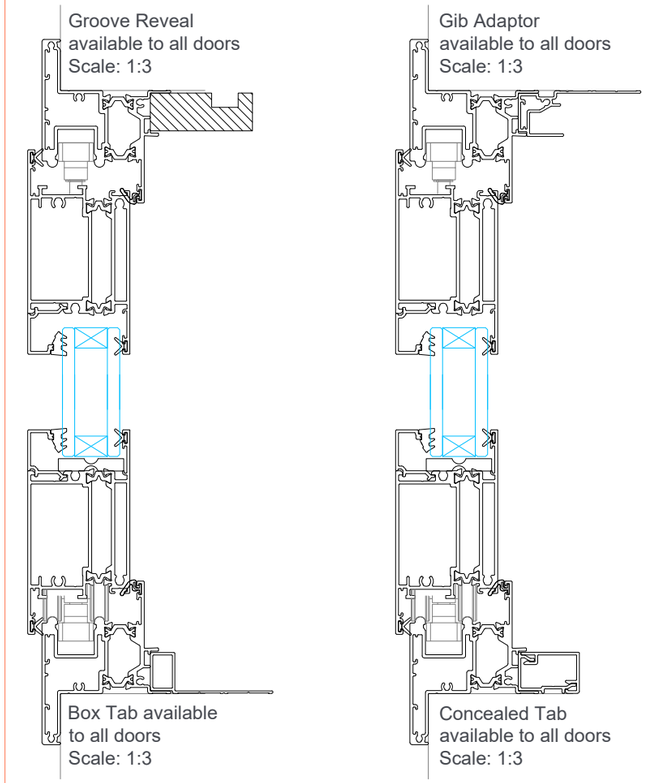

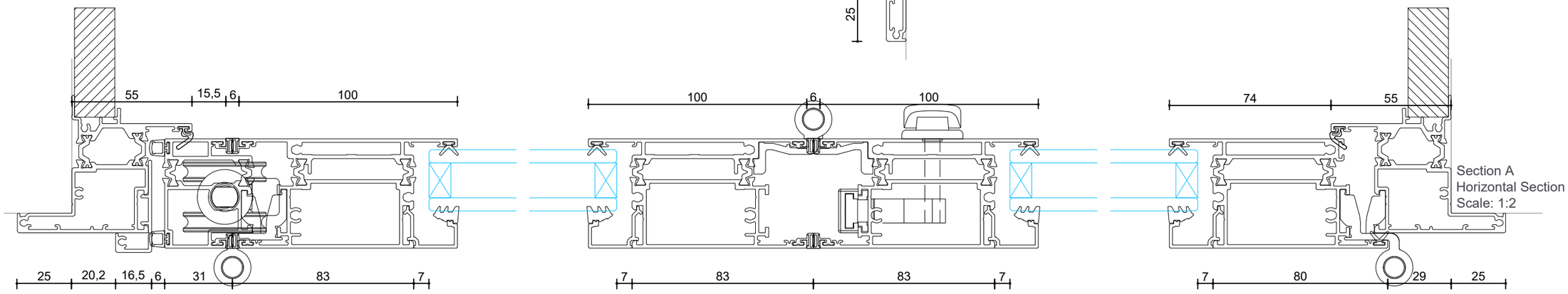

Section A
Horizontal Section
Scale: 1:2

Windows & Doors

Cross Sections
Thermal Suite
Bifold Door 1+3P

Date 04/08/2022
Scale 1:2

Drawn MS
Checked RT

002

©UNO Windows & Doors. All rights reserved.
Technical details subject to change without notice.

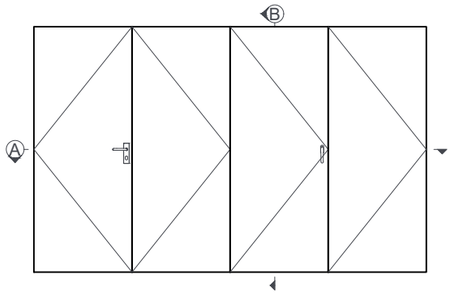

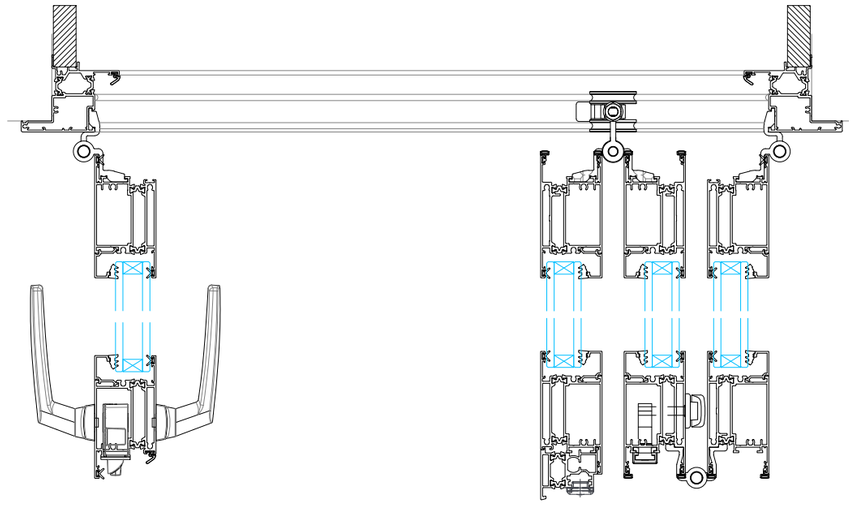

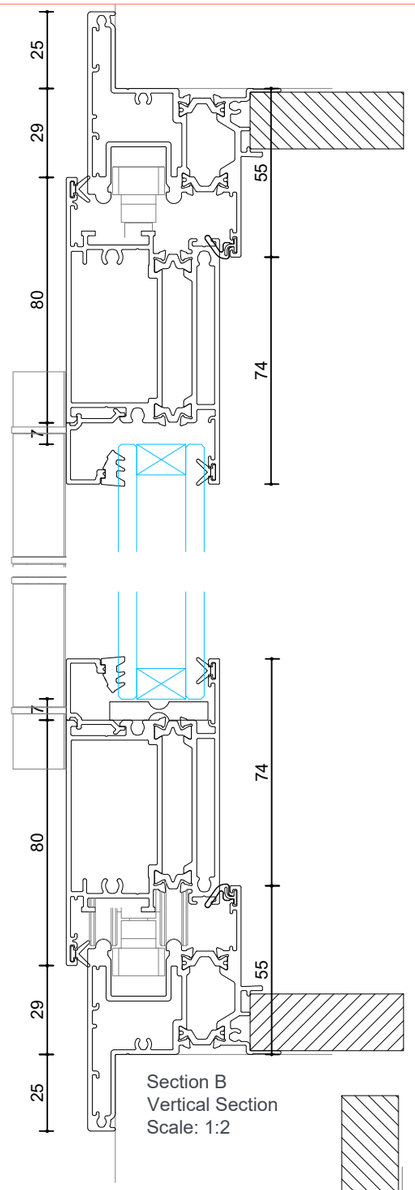

Section B
Vertical Section
Scale: 1:2

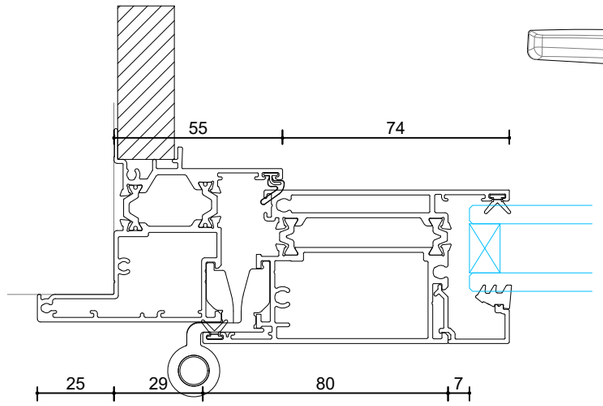

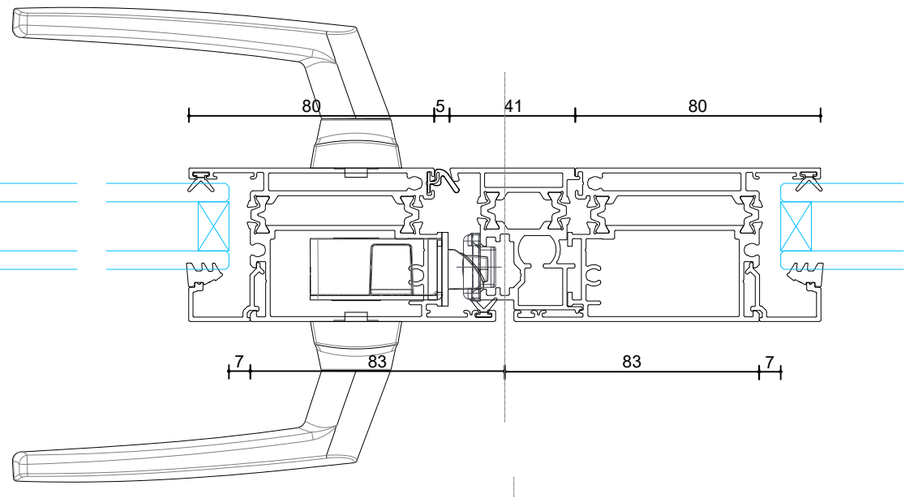

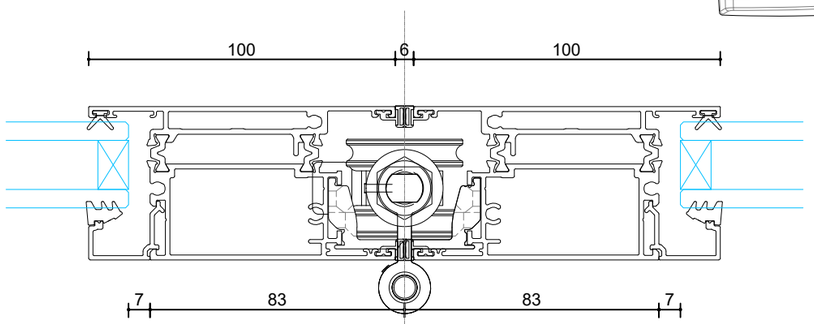

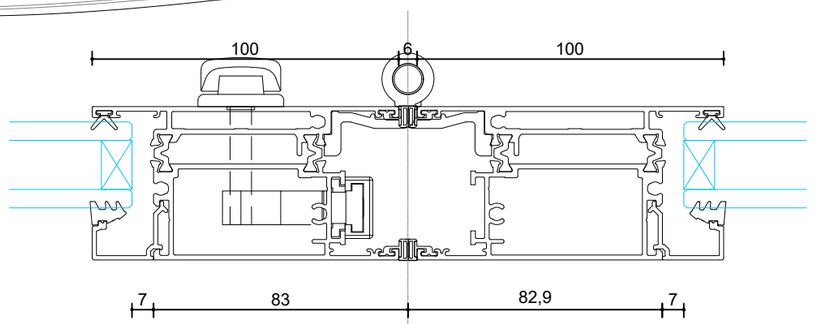

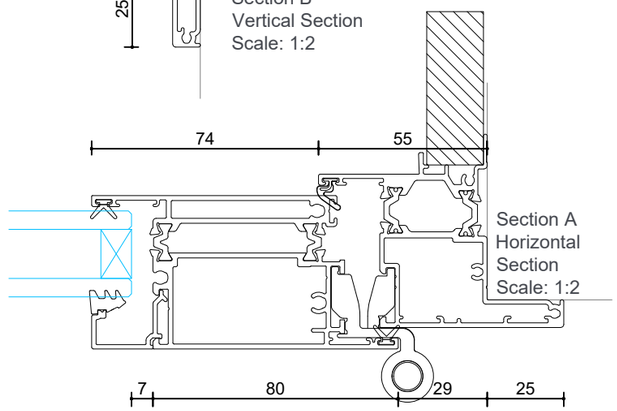

Section A
Horizontal
Section
Scale: 1:2

Windows & Doors

Cross Sections
Thermal Suite
Bifold Door 1+2P

Date 04/08/2022
Scale 1:2

Drawn MS
Checked RT

003

©UNO Windows & Doors. All rights reserved.
Technical details subject to change without notice.

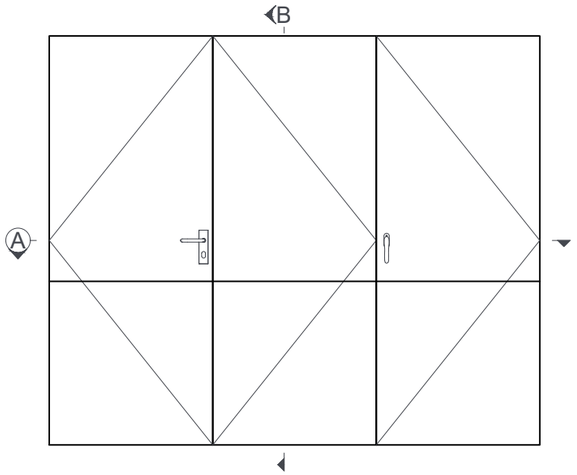

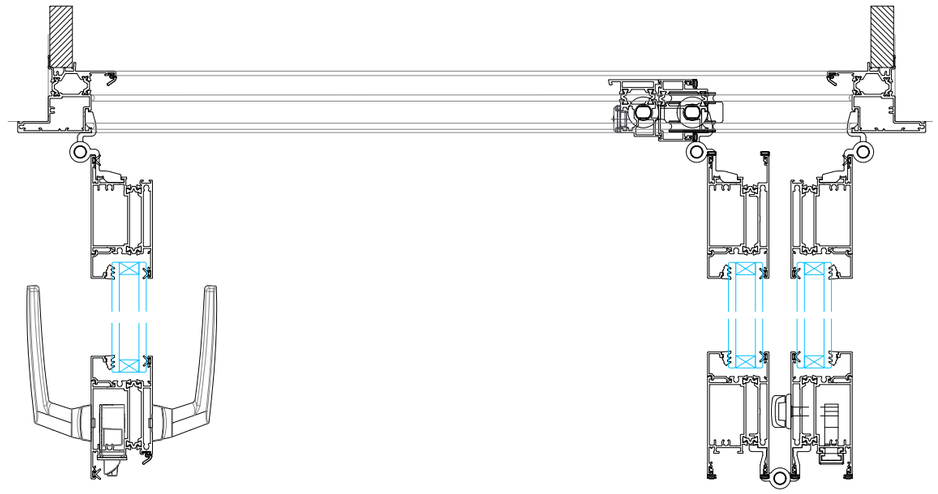

Section A - Open
Horizontal Section
Scale: 1:5

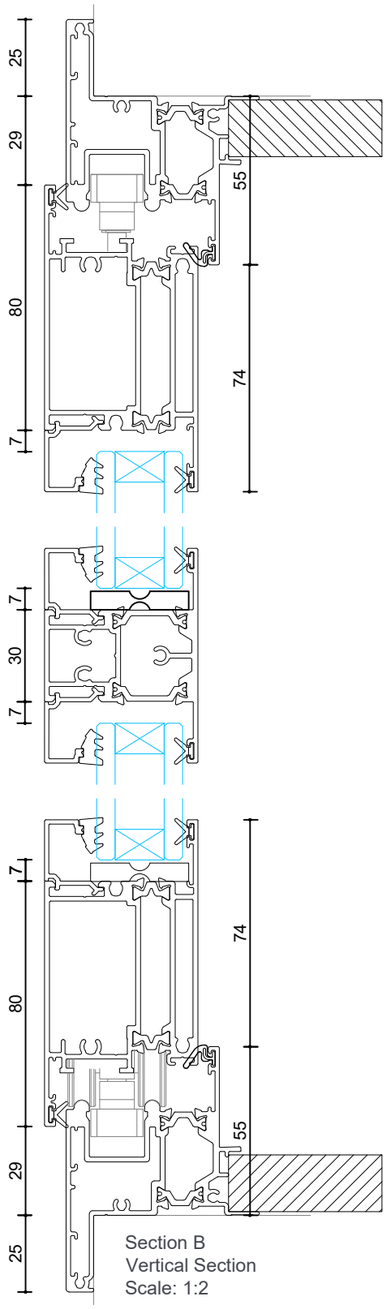

Section B
Vertical Section
Scale: 1:2

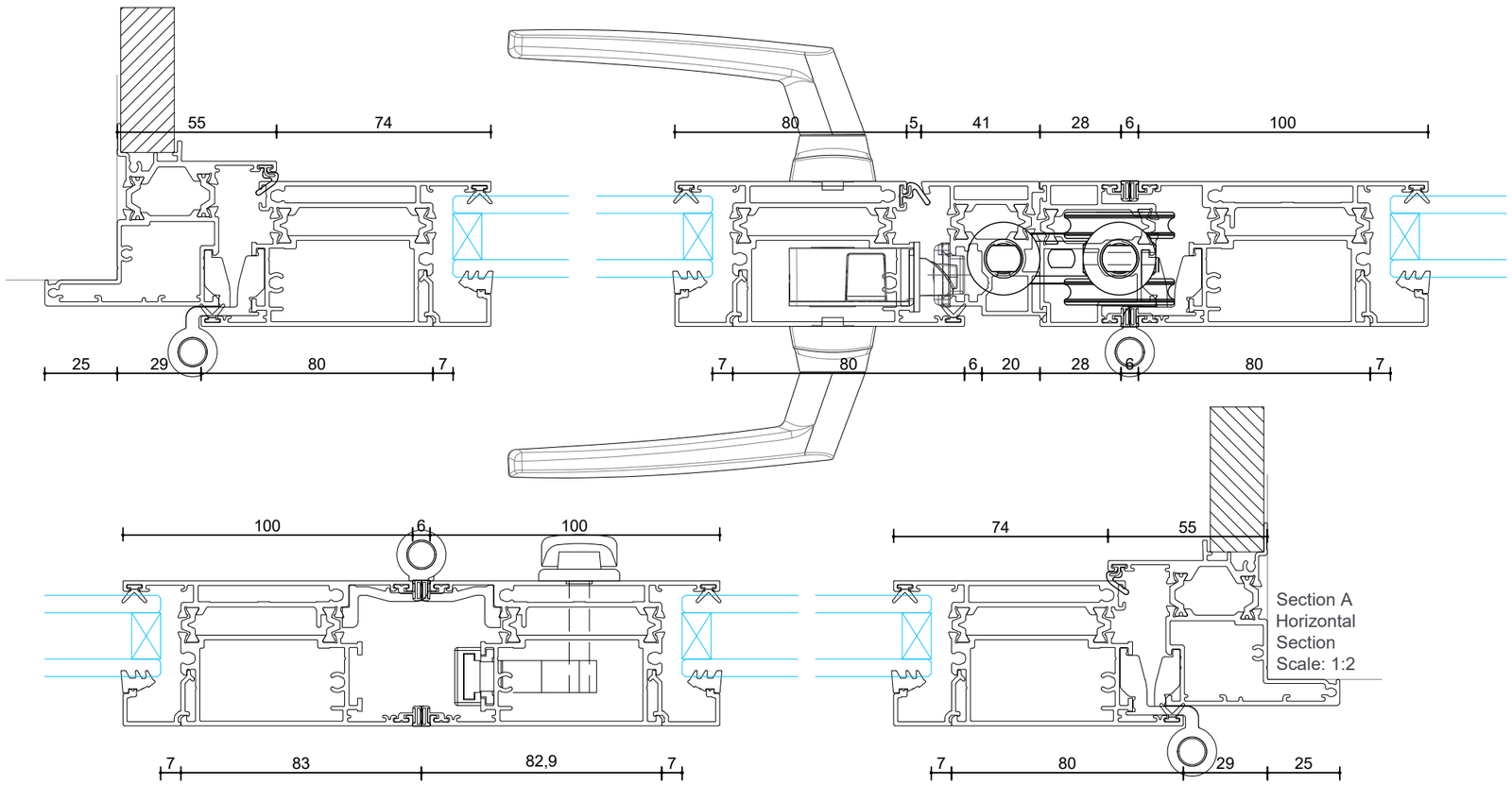

Section A
Horizontal
Section
Scale: 1:2

Windows & Doors

Cross Sections
Thermal Suite
Bifold Door 2+2P

Date 04/08/2022
Scale 1:2

Drawn MS
Checked RT

004

©UNO Windows & Doors. All rights reserved.
Technical details subject to change without notice.

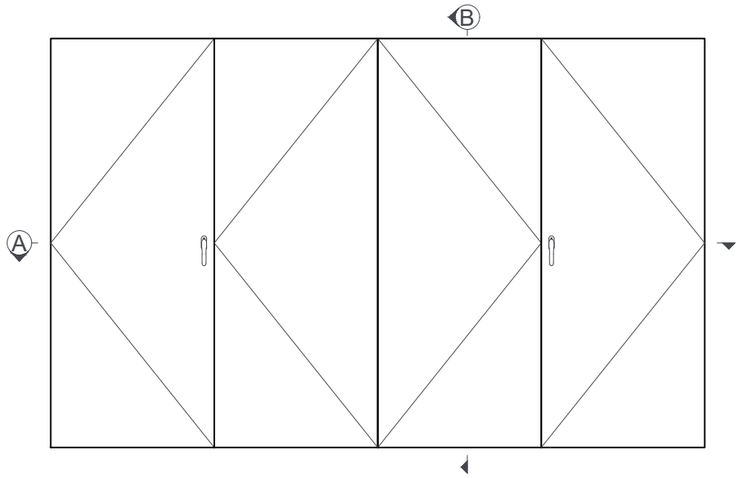

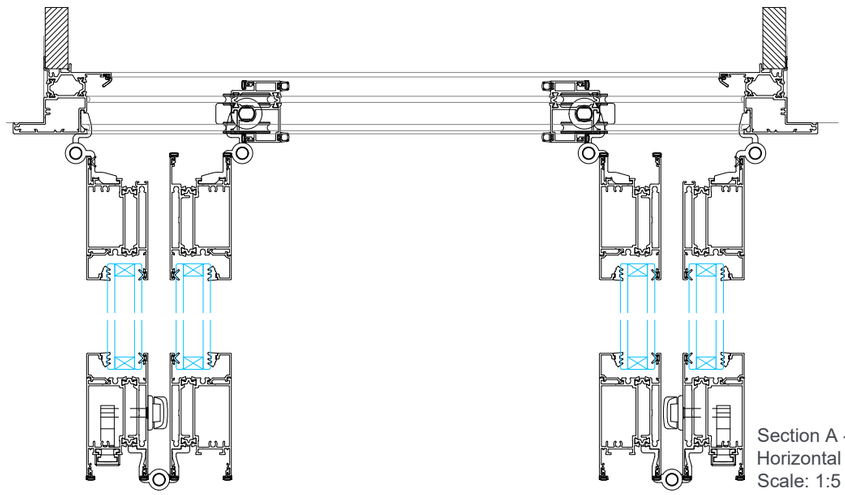

Section A - Open
Horizontal Section
Scale: 1:5

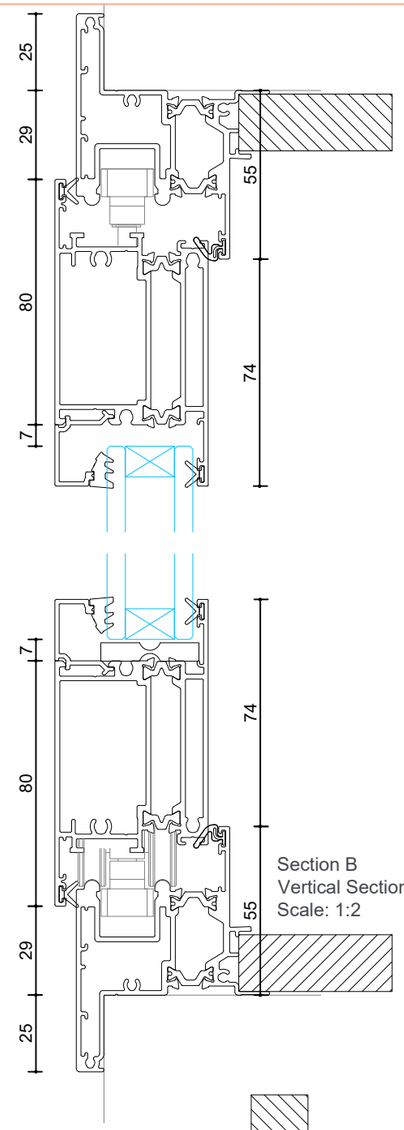

Section B
Vertical Section
Scale: 1:2

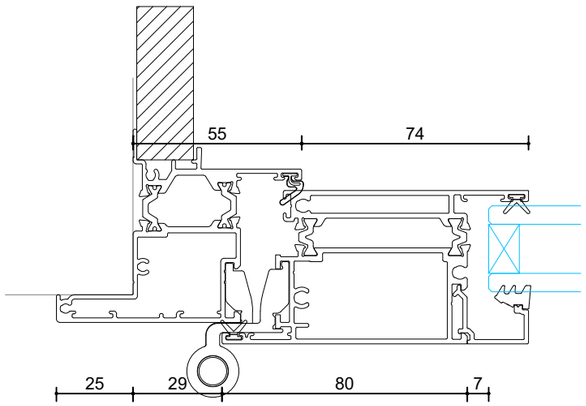

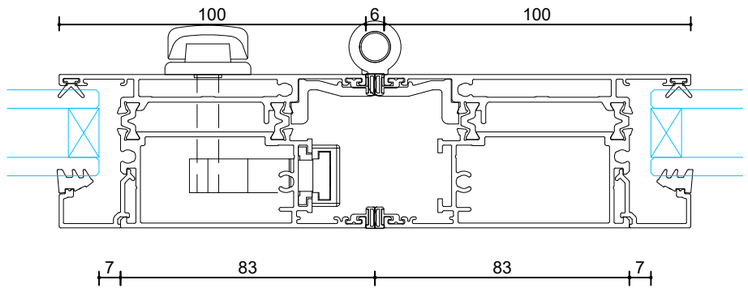

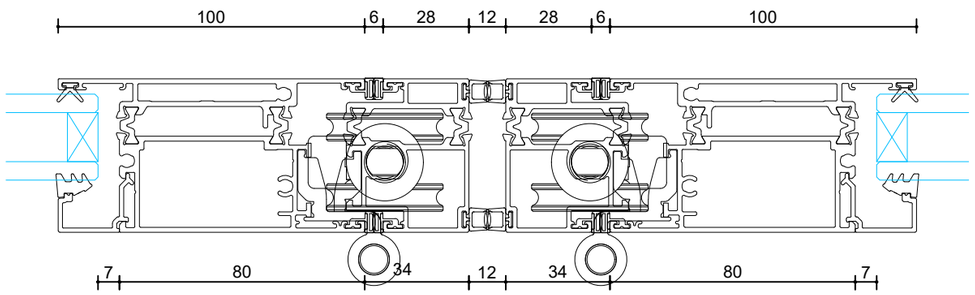

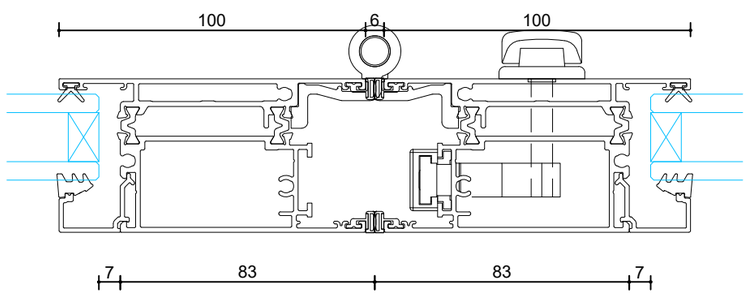

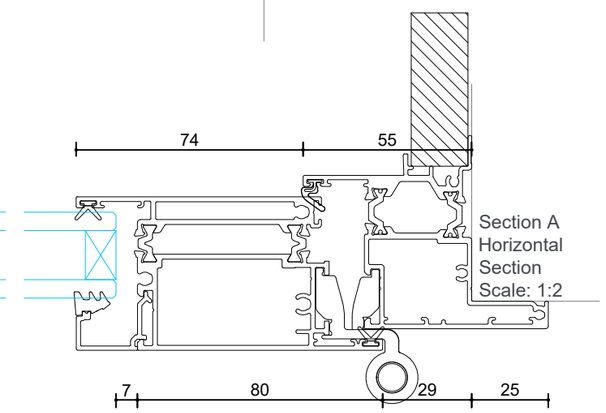

Section A
Horizontal
Section
Scale: 1:2

UNO Windows & Doors

Cross Sections
Thermal Suite
Bifold Door 3P

Date 04/08/2022 **Drawn** MS
Scale 1:2 **Checked** RT

005

©UNO Windows & Doors. All rights reserved.
Technical details subject to change without notice.

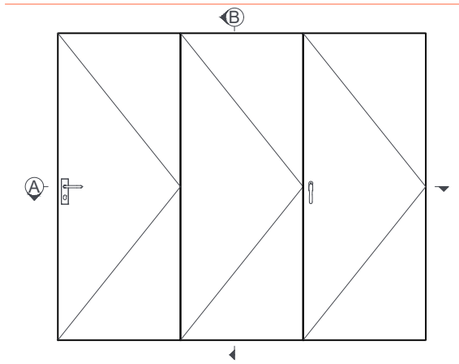

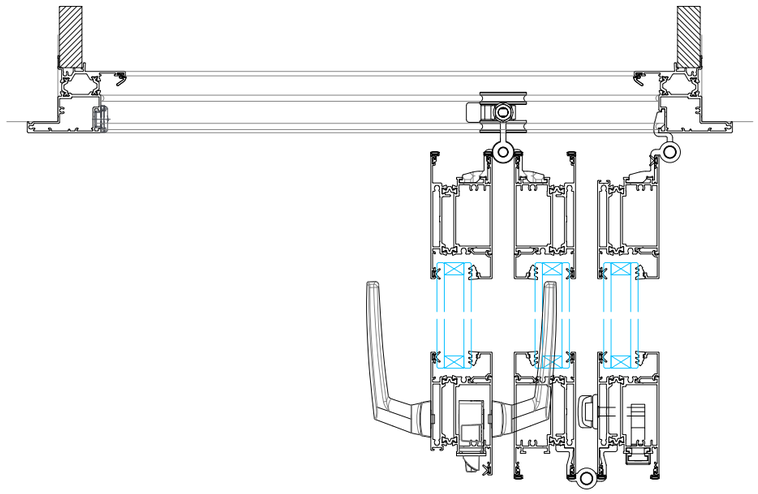

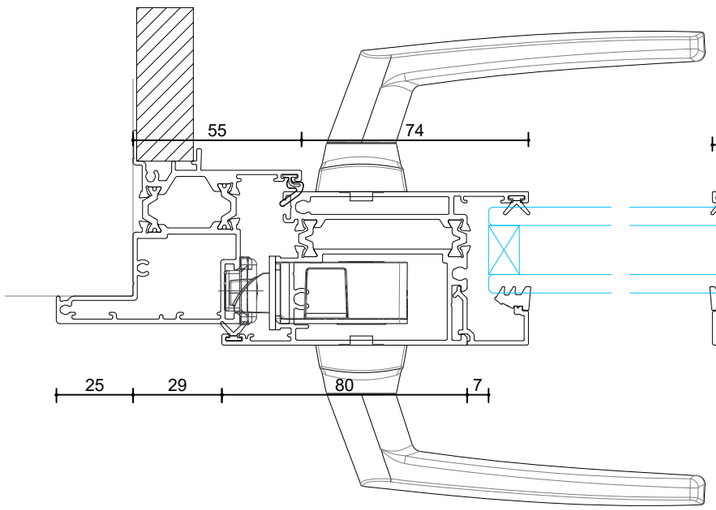

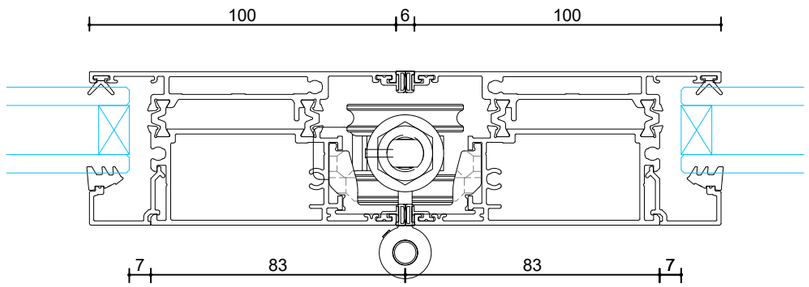

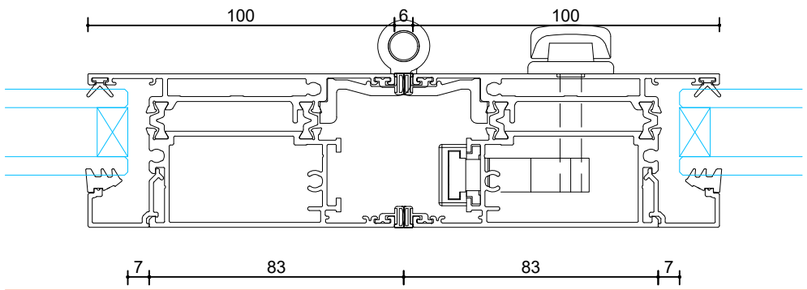

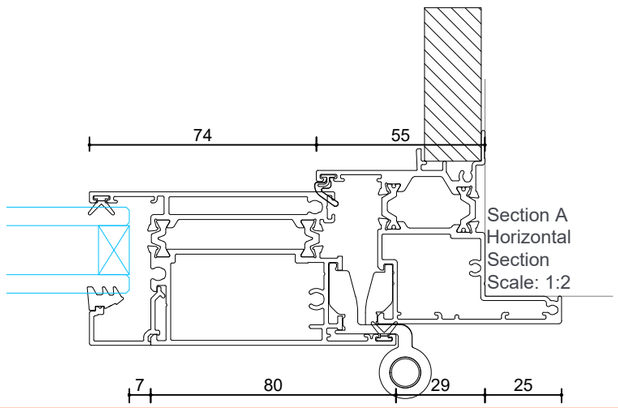

Section A
Horizontal
Section
Scale: 1:2

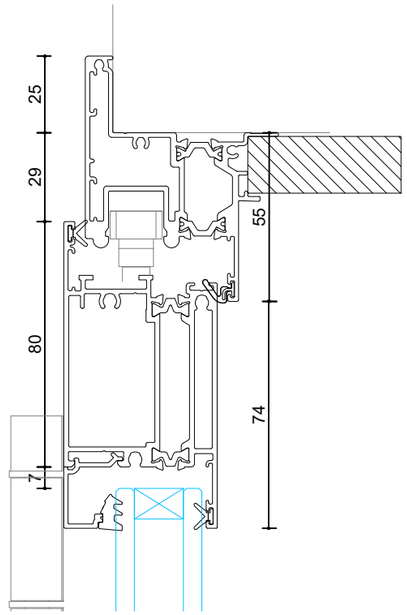

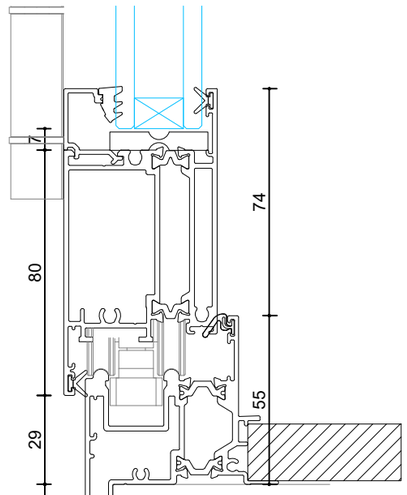

Section B
Vertical Section
Scale: 1:2

Windows & Doors

Cross Sections
Thermal Suite
Bifold Door 4P

Date 04/08/2022
Scale 1:2

Drawn MS
Checked RT

006

©UNO Windows & Doors. All rights reserved.
Technical details subject to change without notice.

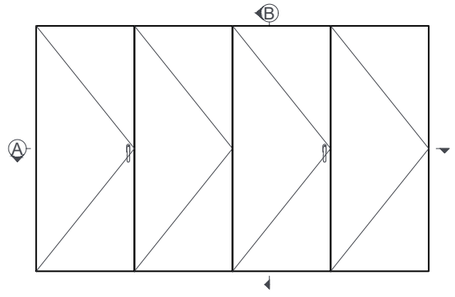

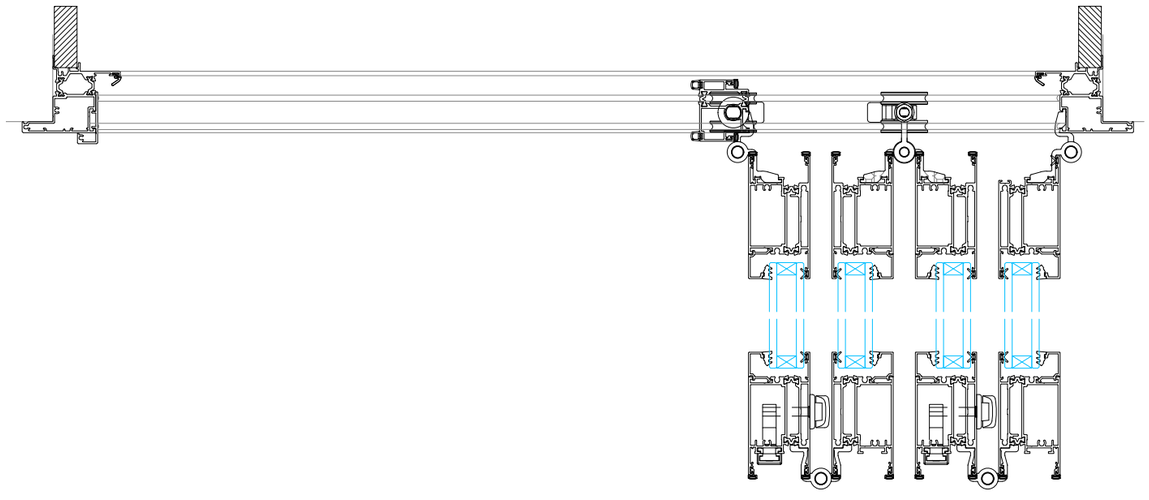

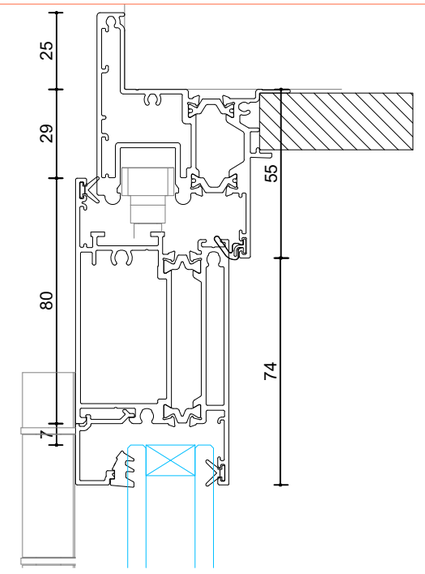

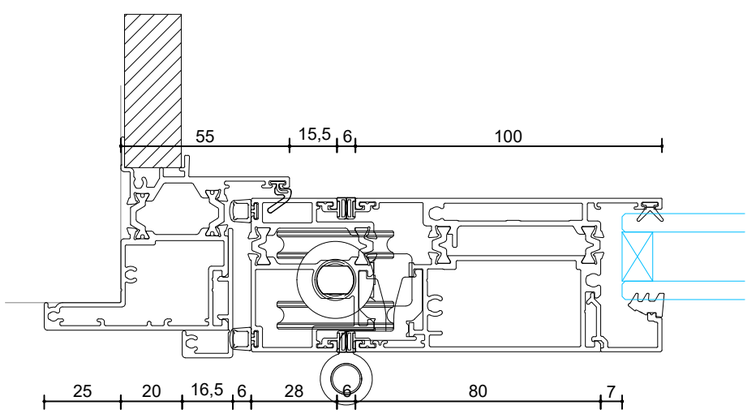

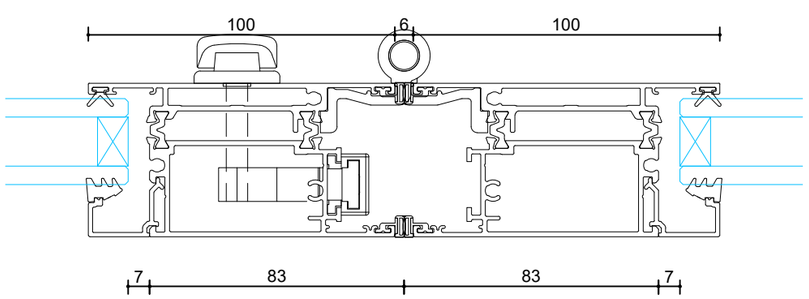

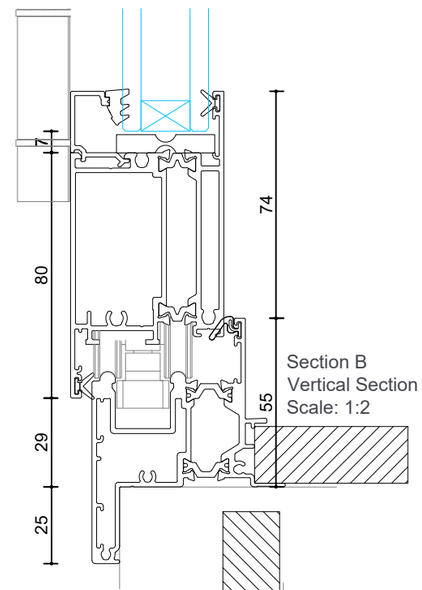

Section B
Vertical Section
Scale: 1:2

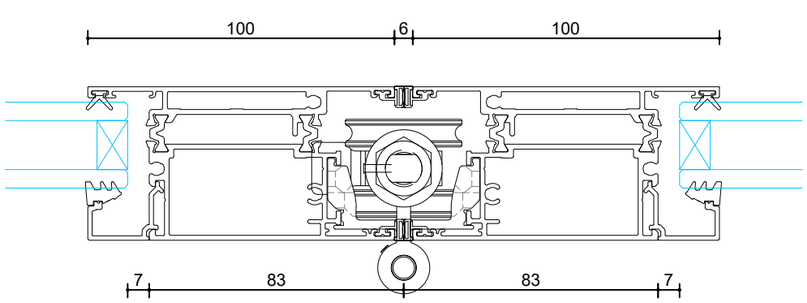

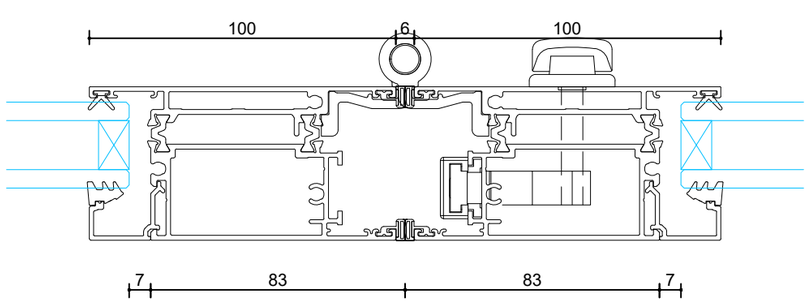

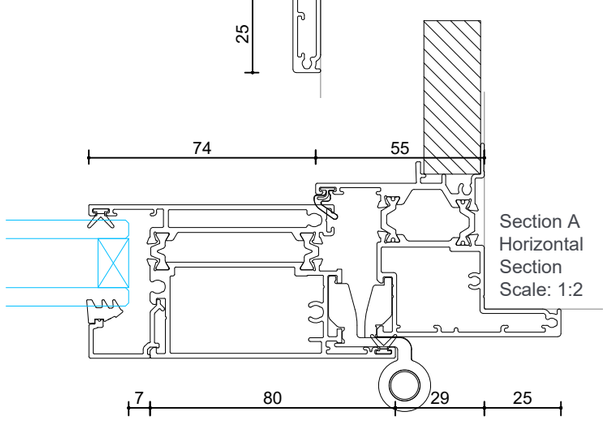

Section A
Horizontal
Section
Scale: 1:2

Windows & Doors

Cross Sections
Thermal Suite
Bifold Door 3+3P

Date 04/08/2022
Scale 1:2

Drawn MS
Checked RT

007

©UNO Windows & Doors. All rights reserved.
Technical details subject to change without notice.

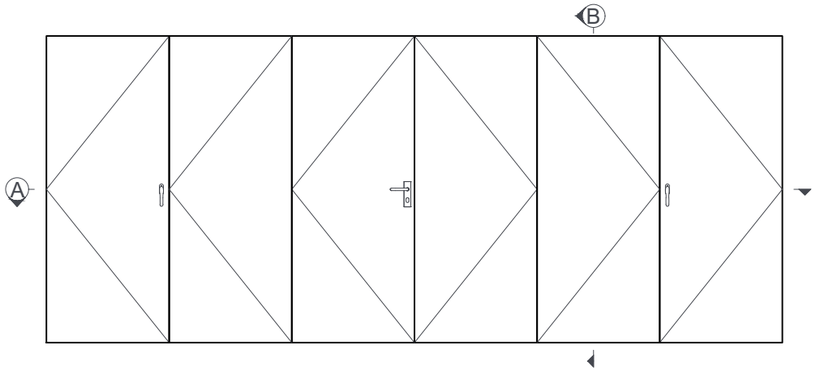

Section A - Open
Horizontal Section
Scale: 1:8

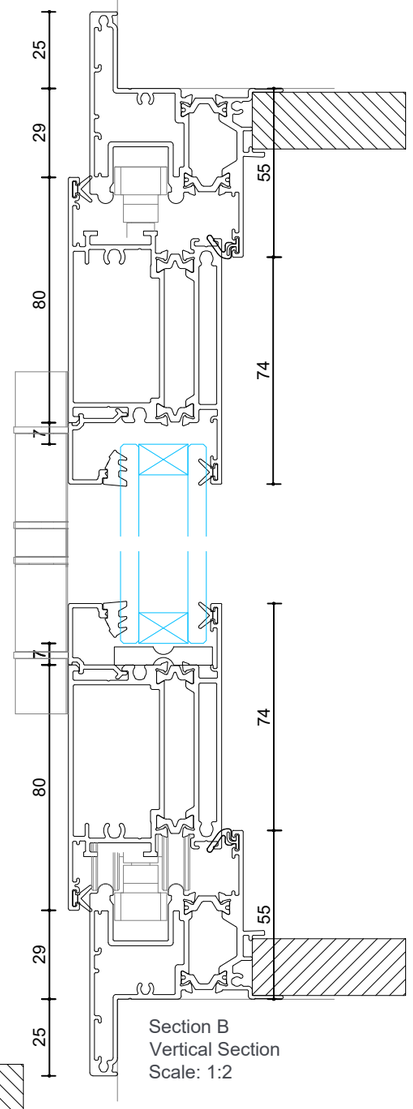

Section B
Vertical Section
Scale: 1:2

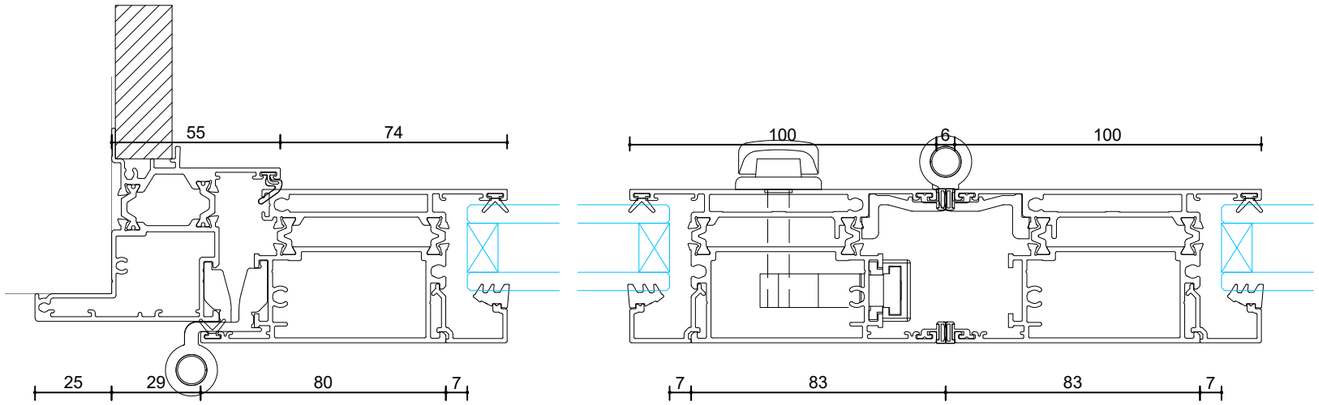

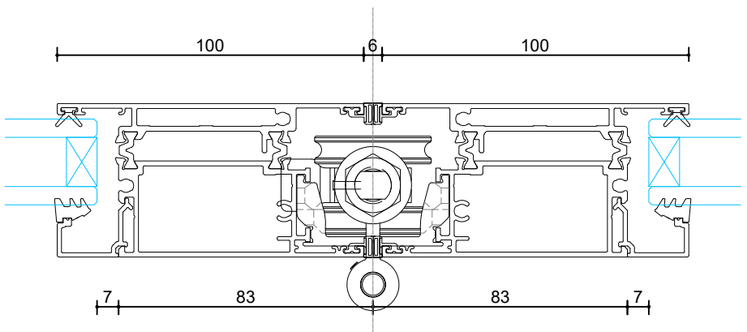

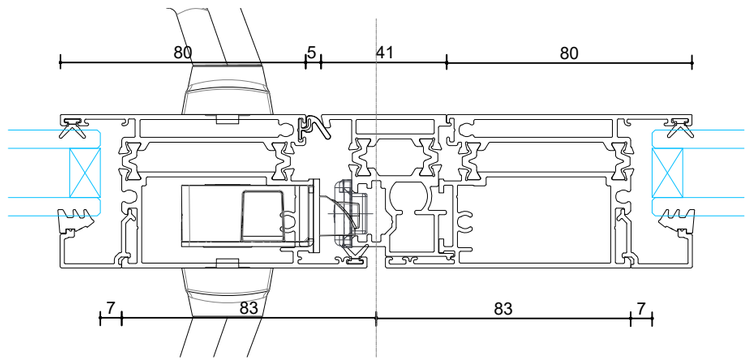

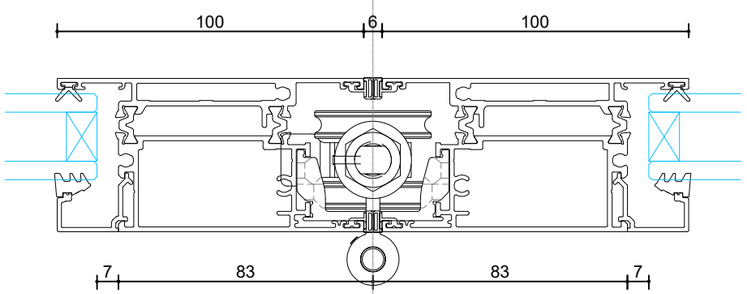

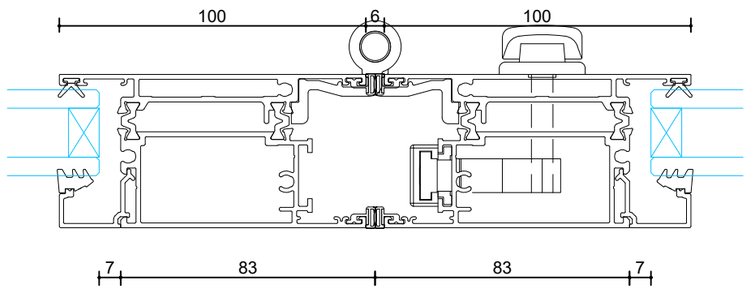

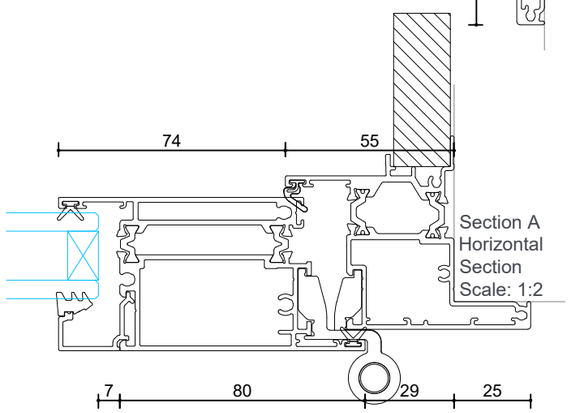

Section A
Horizontal
Section
Scale: 1:2

Cross Sections
Thermal Suite
Bifold Door 2P + Overlight

Date 04/08/2022
Scale 1:2

Drawn MS
Checked RT

008

©UNO Windows & Doors. All rights reserved.
Technical details subject to change without notice.

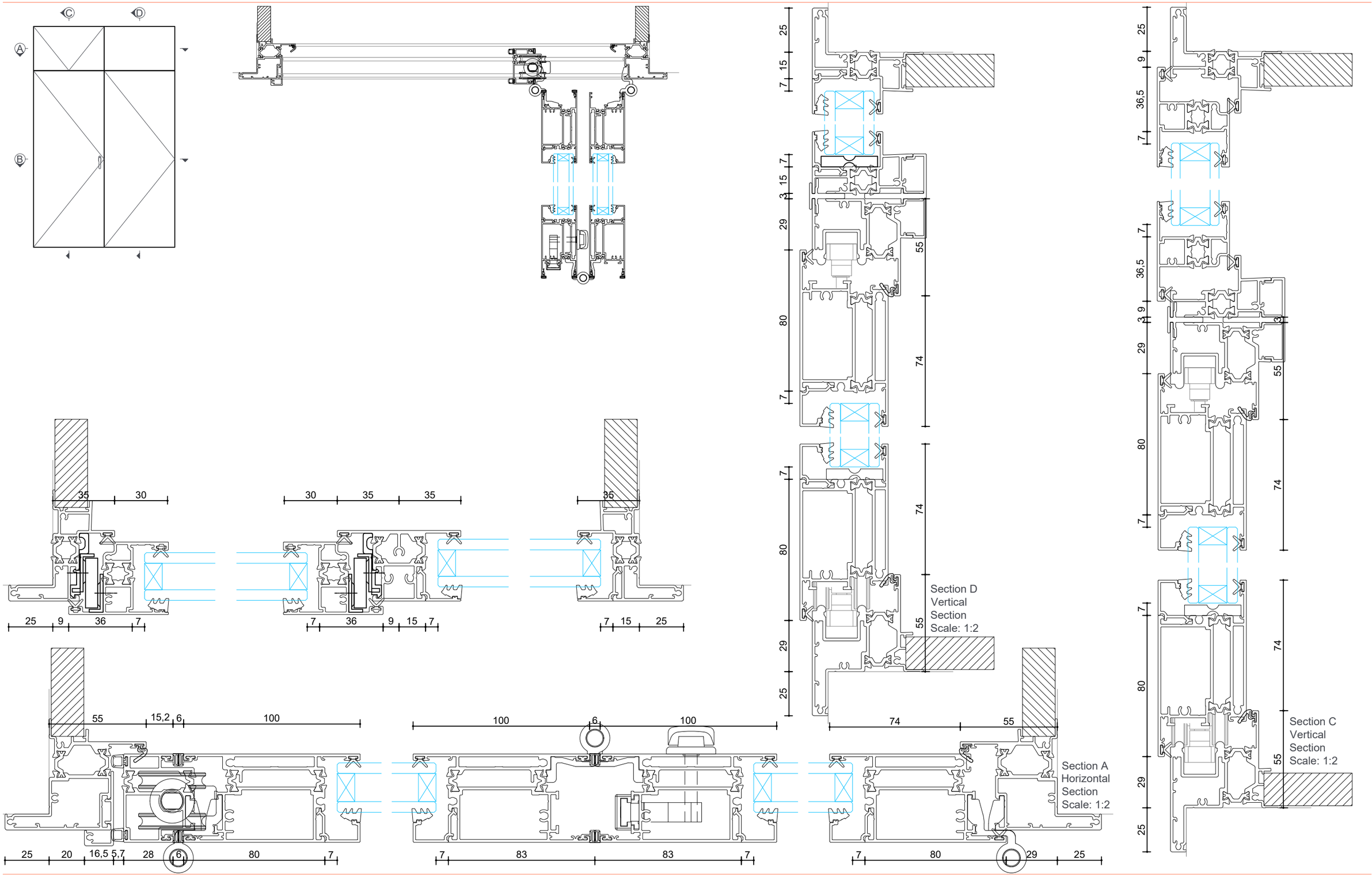

Windows & Doors

Cross Sections
Thermal Suite
Bifold Door 2P + Sidelight

Date 04/08/2022
Scale 1:2

Drawn MS
Checked RT

009
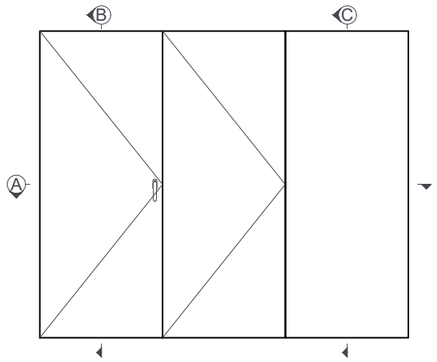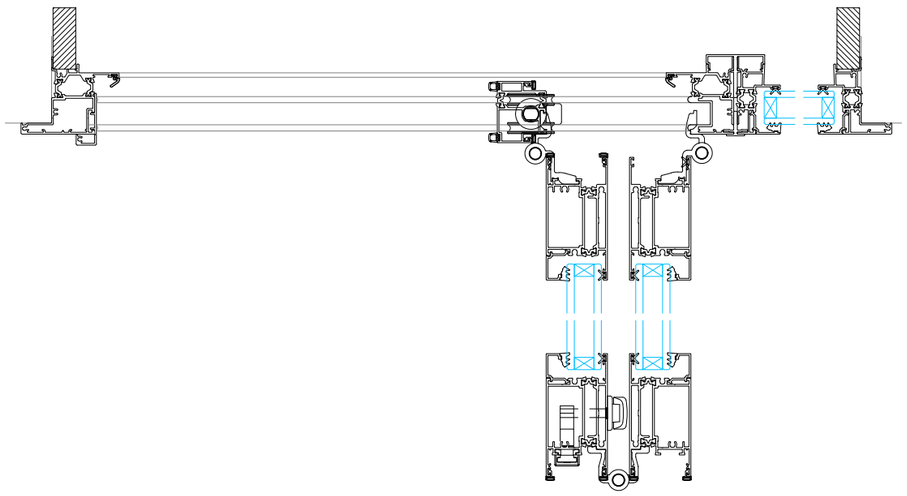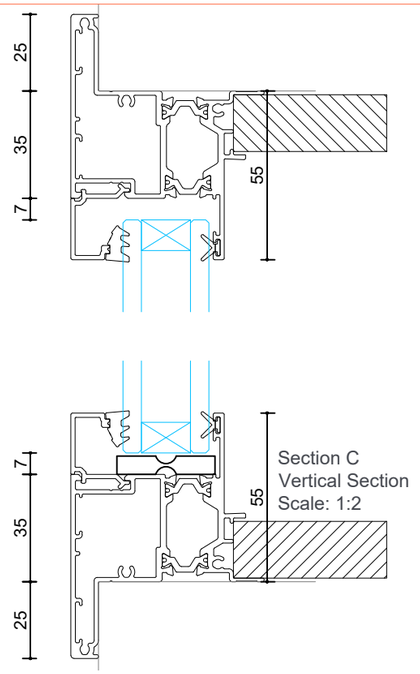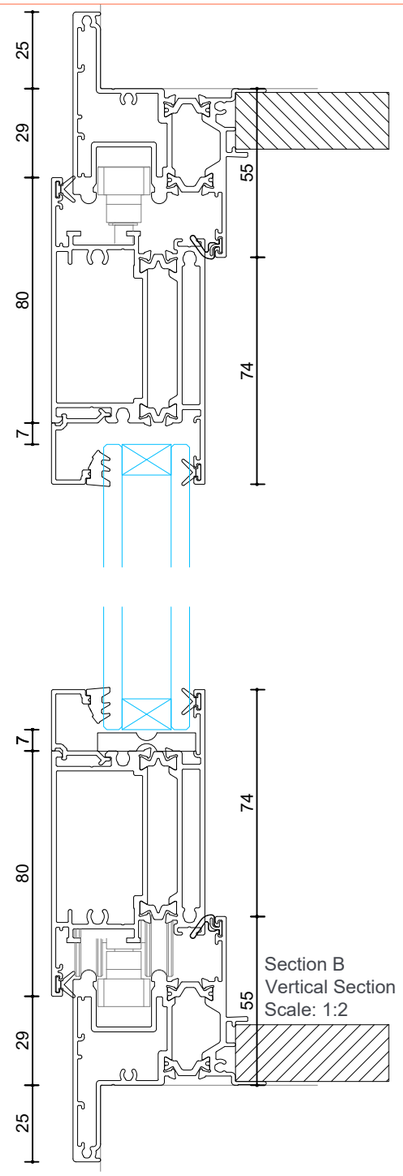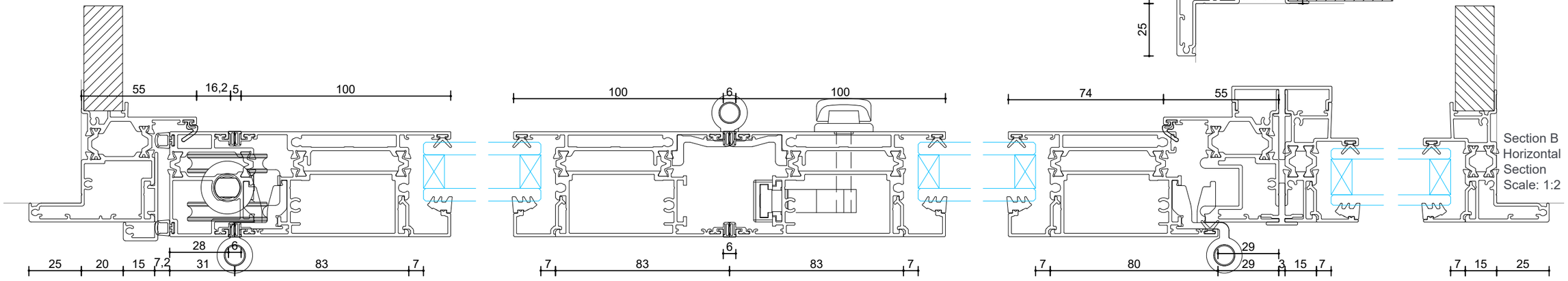
©UNO Windows & Doors. All rights reserved.
Technical details subject to change without notice.